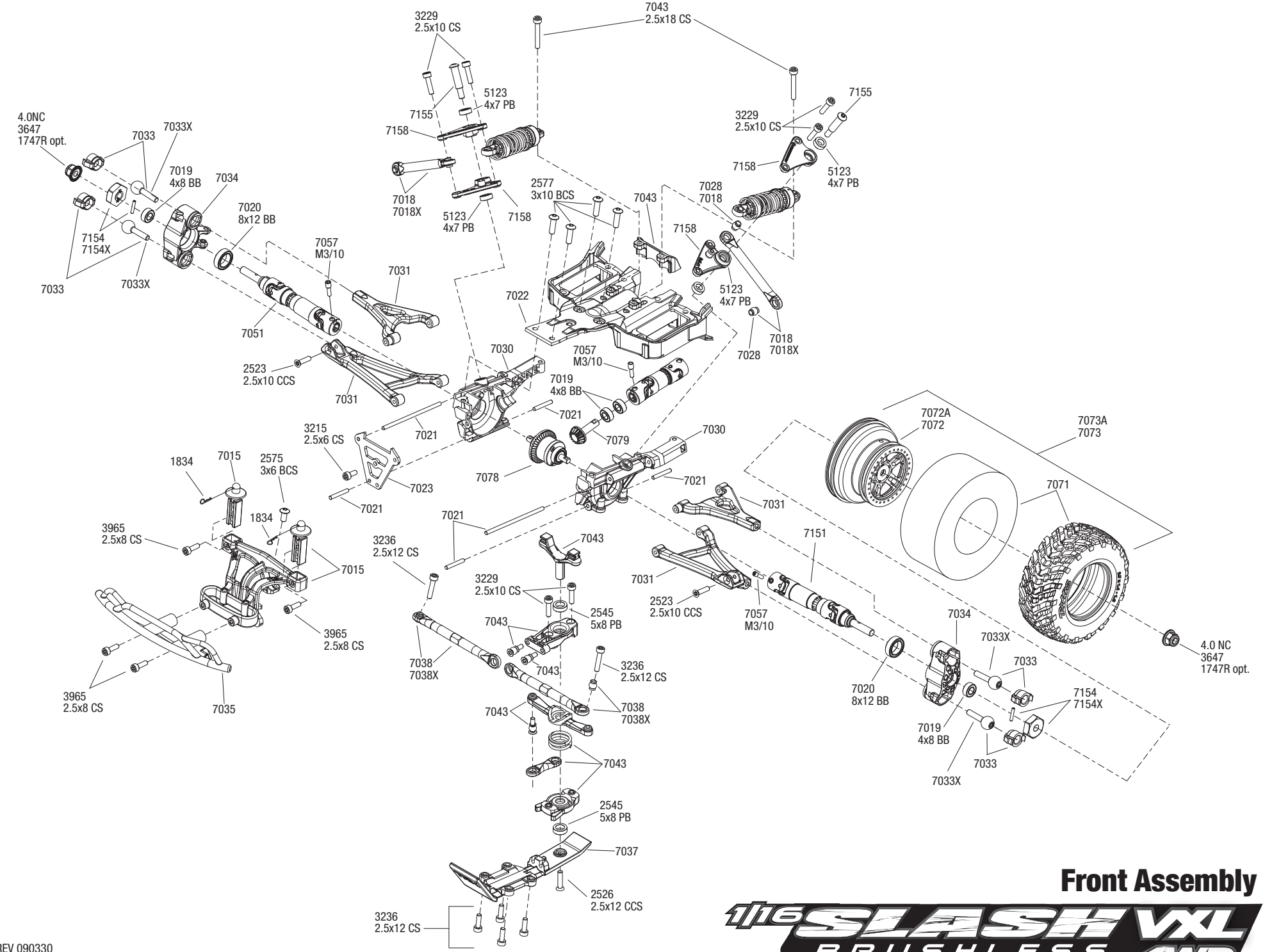

Front Assembly

1/16 SLASH VXL BRUSHLESS 4WD

REV 090330

Specifications on this page are subject to change without notice. Every attempt has been made to ensure the accuracy of this drawing, however Traxxas cannot be held responsible for typographical or other errors.

See Parts List for a complete listing of optional accessories.