TRAXXAS SUMMIT

# Exocage and Body

## Exocage Assembly

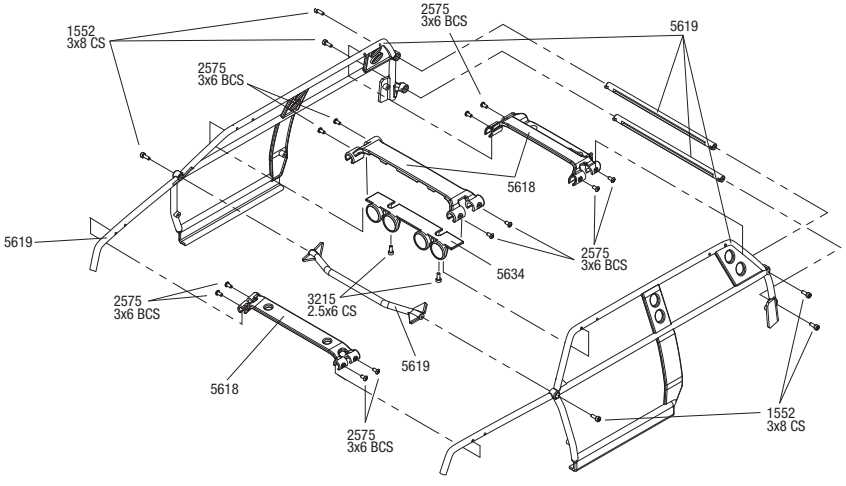


## Summit Body Assembly (view from bottom)

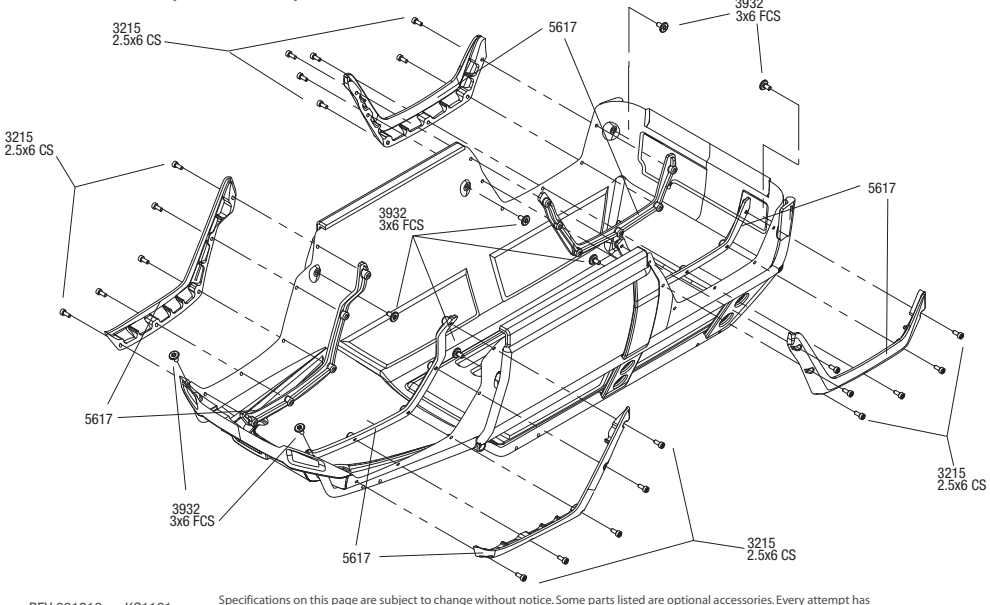


# Driveshafts

## Center Front Driveshaft Assembly

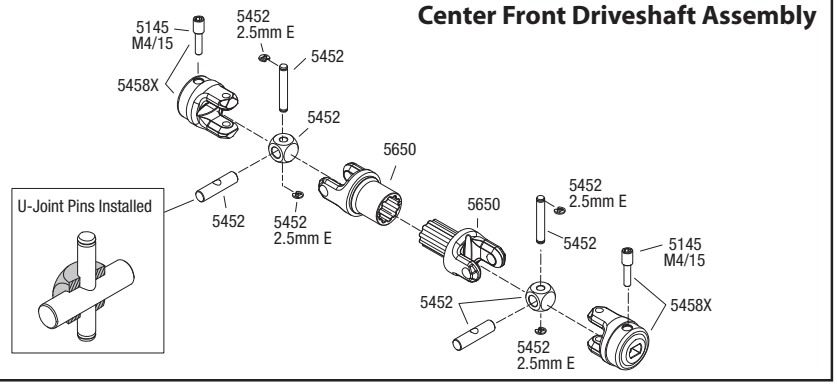


## Center Rear Driveshaft Assembly

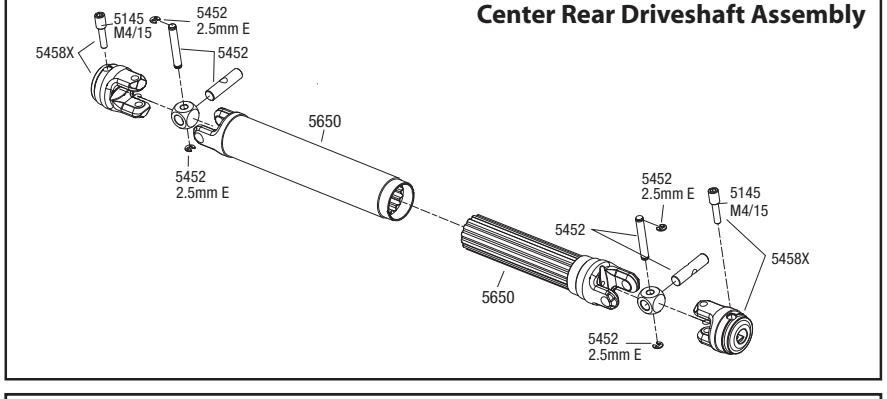


## Axle Driveshaft Assembly

**Available fully assembled 5651 (long),5652 (Short)**

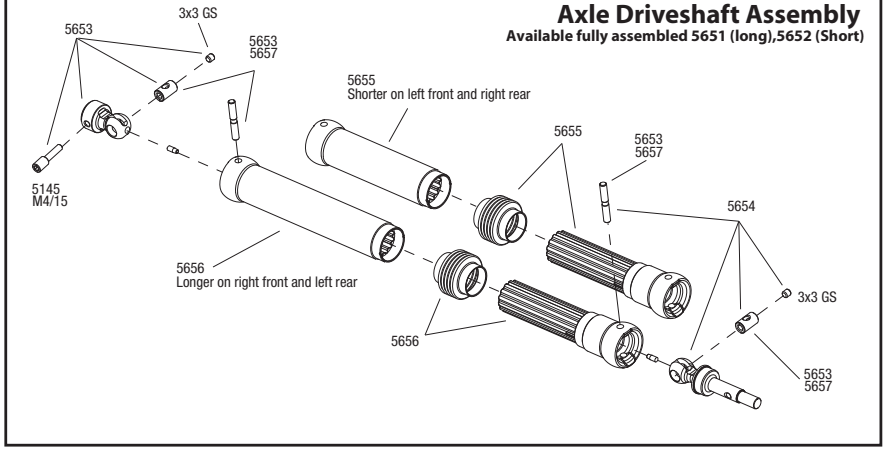




Specifications on this page are subject to change without notice. Some parts listed are optional accessories. Every attempt has been made to ensure the accuracy of this drawing, however Traxxas cannot be held responsible for typographical or other errors.