E-MAXX BRUSHLESS EDITION

Chassis Assembly

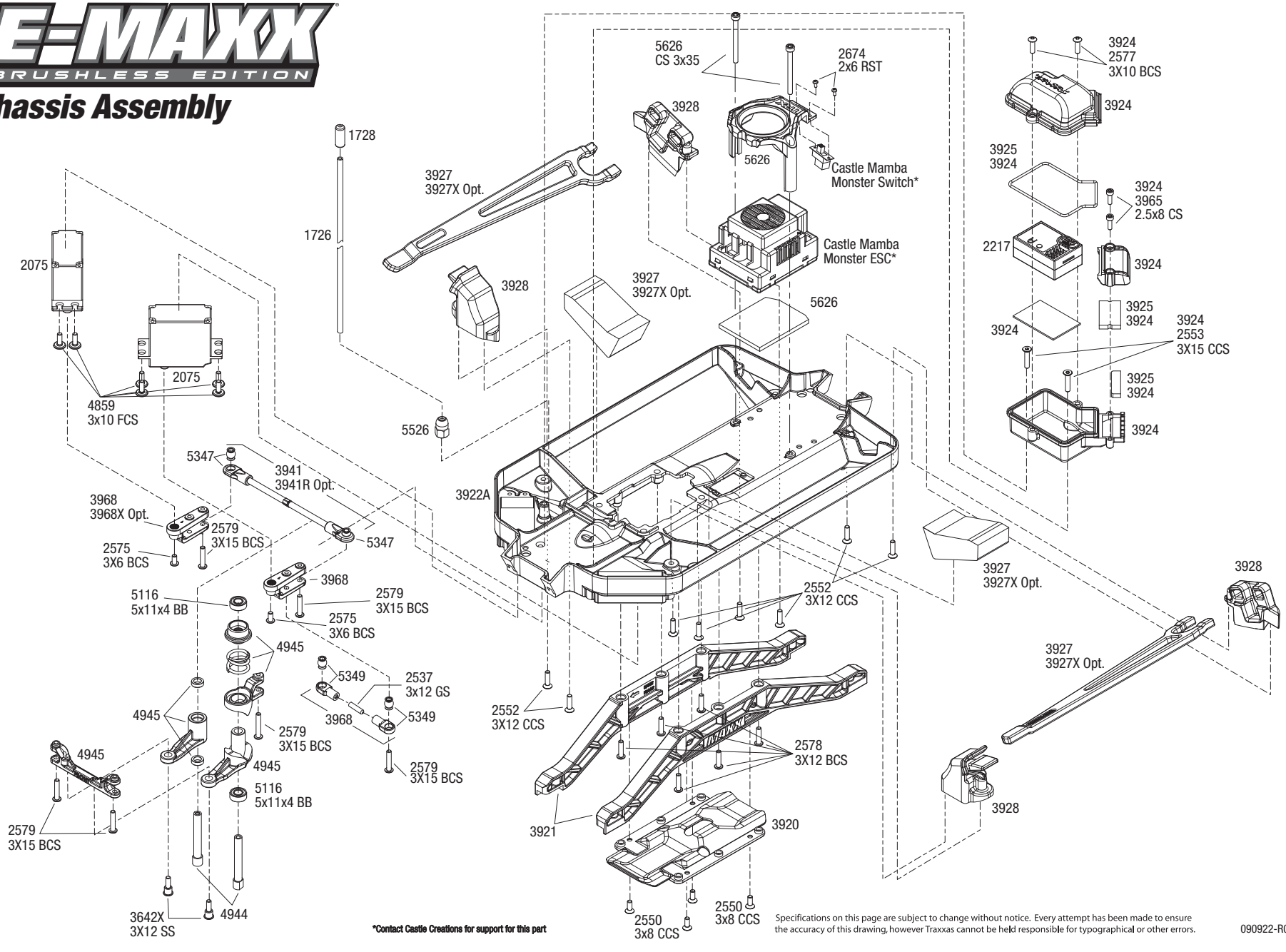

*Contact Castle Creations for support for this part

Specifications on this page are subject to change without notice. Every attempt has been made to ensure the accuracy of this drawing, however Traxxas cannot be held responsible for typographical or other errors.

090922-R00