Rally Chassis Assembly

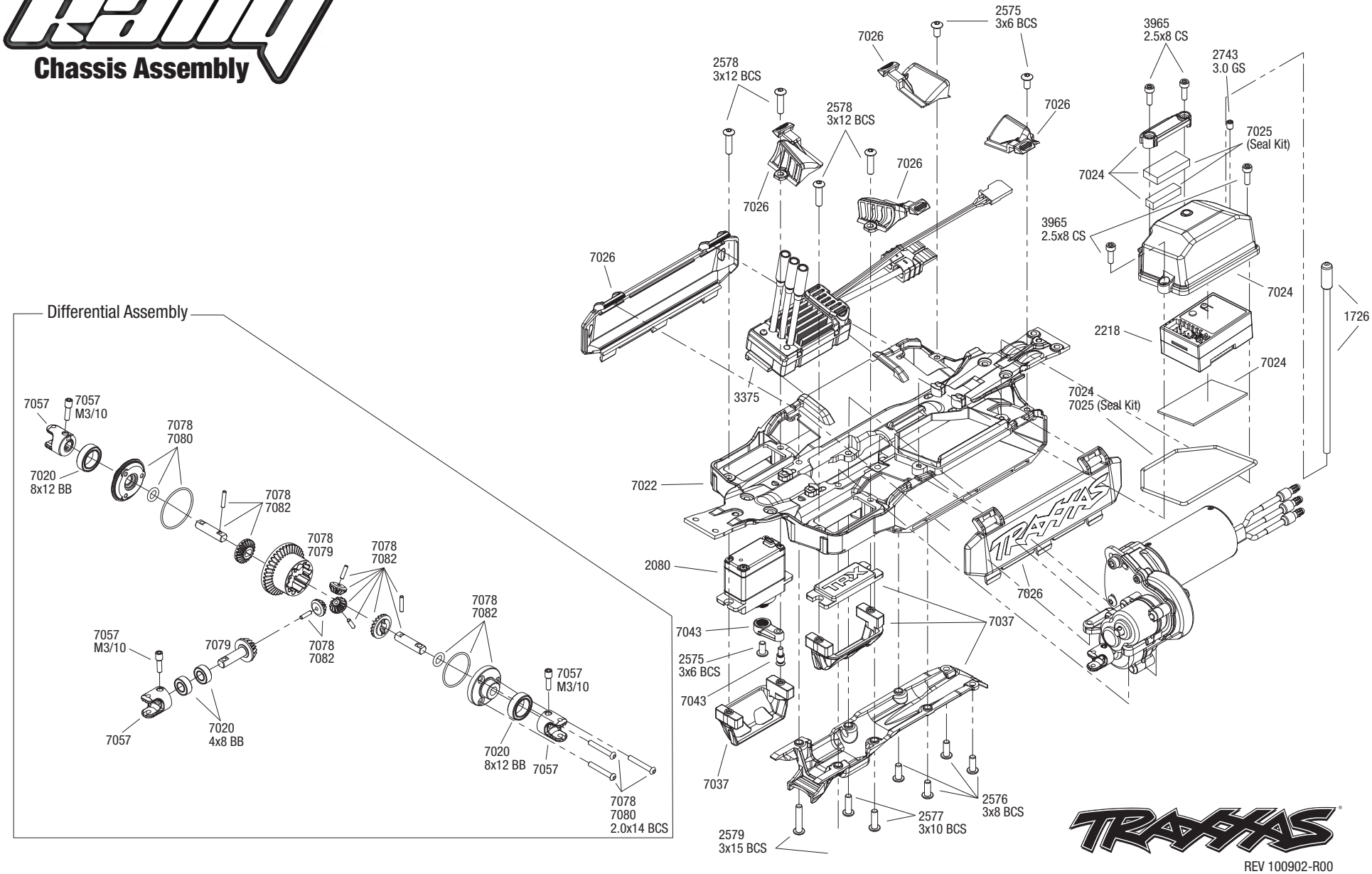

REV 100902-R00

See Parts List for a complete listing of optional accessories.

Specifications on this page are subject to change without notice.
Every attempt has been made to ensure the accuracy of this drawing, however Traxxas cannot be held responsible for typographical or other errors.