REVO 2008 PLATINUM EDITION

CHASSIS ASSEMBLY

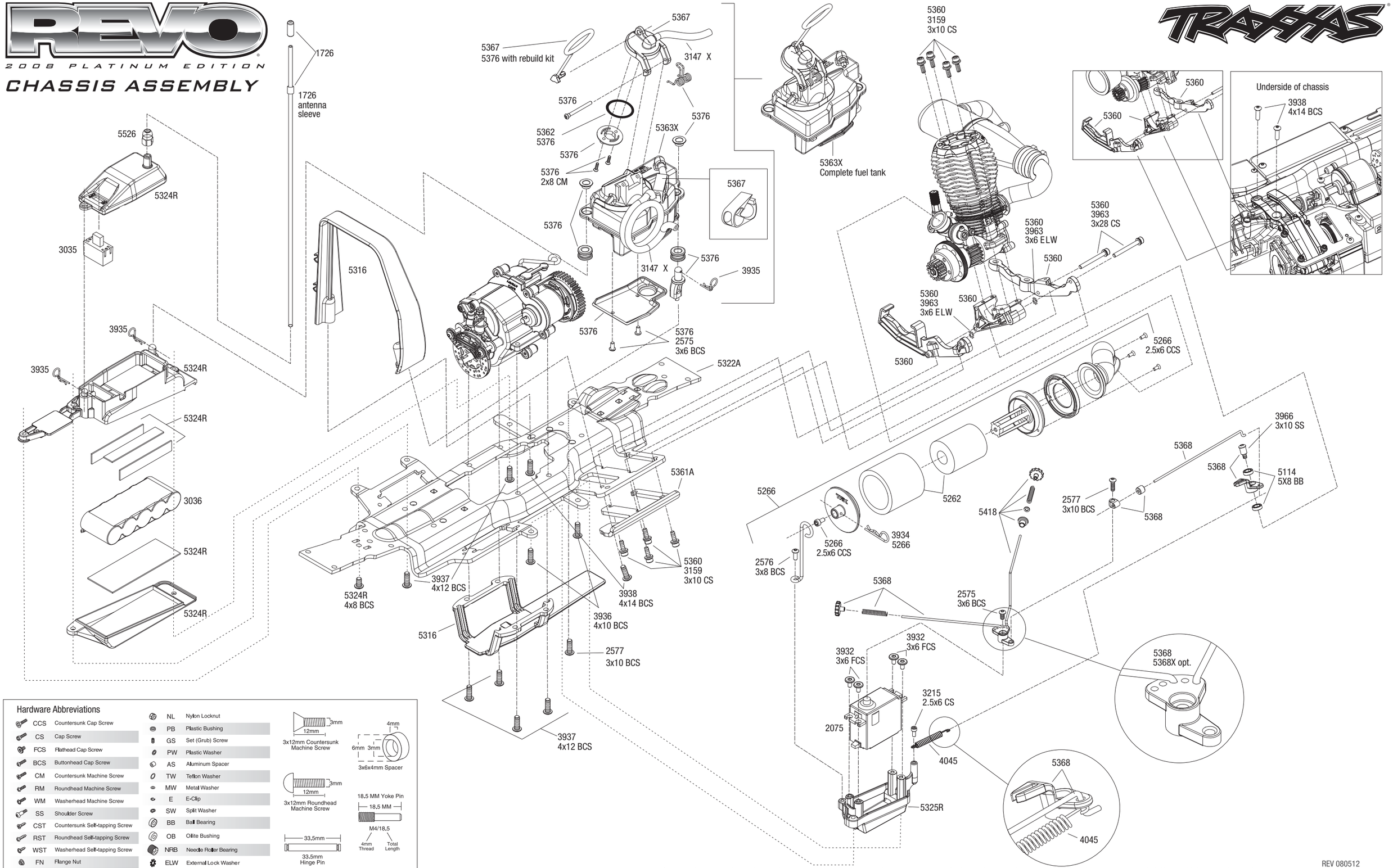

Hardware Abbreviations

CCS	Countersunk Cap Screw	NL	Nylon Locknut
CS	Cap Screw	PB	Plastic Bushing
FCS	Flathead Cap Screw	GS	Set (Grub) Screw
BCS	Buttonhead Cap Screw	PW	Plastic Washer
CM	Countersunk Machine Screw	AS	Aluminum Spacer
RM	Roundhead Machine Screw	TW	Teflon Washer
WM	Washerhead Machine Screw	MW	Metal Washer
SS	Shoulder Screw	E	E-Clip
CST	Countersunk Self-tapping Screw	SW	Split Washer
RST	Roundhead Self-tapping Screw	BB	Ball Bearing
WST	Washerhead Self-tapping Screw	OB	Oilite Bushing
FN	Flange Nut	NRB	Needle Roller Bearing
		ELW	External Lock Washer

3x12mm Countersunk Machine Screw (3mm, 12mm)

3x12mm Roundhead Machine Screw (3mm, 12mm)

33.5mm Hinge Pin (33.5mm)

3x6x4mm Spacer (4mm, 6mm, 3mm)

18.5 MM Yoke Pin (18.5 MM)

M4/18.5 (4mm Thread, Total Length)

Specifications on this page are subject to change without notice. Some parts listed are optional accessories. Every attempt has been made to ensure the accuracy of this drawing, however Traxxas cannot be held responsible for typographical or other errors.