1/8th 4WD Electric Power R/C Rock Crawler
(A.Version/B.T2&T3&T6 Version/C.Extra Longer Version)

Specifications:

STYLES	LENGTH	WIDTH	HEIGHT	WHEEL BASE	DIAMETER OF WHEEL	WIDTH OF WHEEL	GEAR RATIO
A&B	645mm	375mm	225mm	460mm	182mm	82mm	1:48.15
C	705mm						

Spare Part

98088-Diff. Gear (52T/15T) 2P (50T/15T) 2P (50T) 2P	98011-Gear Box 2P w/Gear Box Cover 2P w/Motor Plate 2P	98009-Link Mount 2P	98010-Steering Link 80*6.0mm (For 94880& T2 T3 T6version 1P) (Extra Longer Version 2P)	98019-Driven Case (Left) 2P
98020-Driven Case (Right) 2P	98023- Susp.Arm Mount (F/R) 4P	98016-Under Cover 2P	98022N-Servo Mount	98028-Caster Mounts (Left) 2P (Right) 2P
98029-Steering Arm 4P w/Steel Ring 8P	98089-Bumper fixture Frame 2P	98034-Wheel Axle 4P	98036-Adapter Set 4P w/Shaft Pins 4P	98006-Side Guard 2P
98007-Side Guard Post 100mm 4P	98037-Receiver Mount	98038-Battery Holder	98039-Battery Mount 4P	Sp9001-Servo(9kg)
03012-Motor(RC540) w/Gear(13T) 2P	98063-Electronic Speed Controller	03200-Battery (7.2V 2000mAh)	98002- Shock Absorber Set(F/R) 4P (For94880 Version)	99002-Shock Absorber Set 4P(For T2 T3 T6) 97001-Shock Absorber Set (F/R)170mm(Extra Longer)
98090-Adjustable Linkage (not include Extra Longer version)	98091 Center Linkage 4P 140*6.0mm(94880 /T2 T3 T6) 97002 Center Linkage 4P 170*6.5mm (Extra Longer)	98092-Conner Linkage 210*6.0mm 2P	98031-Drive Left Shaft (Short) 2P	98032-Drive Right Shaft (Long) 2P

Spare Part

98027-Body Posts 4P	98033-Gear Shaft (Long) 2P (Short) 2P	99007-Side Linkage(F/R)2P T2 T3 T6 :180*6.0mm 97003-Side Linkage(F/R)2P Extra Longer:210*6.5mm	98024-Suspension Arm (F/R) 4P (For 94880 version)	98049-Rims 2P
98051-Tire w/Foam 2P	98048-Tire Secure Ring (18holes) 8P (For 94880Version)	98050-Pre-Mounted Tire Set (Left) 2P (Right) 2P	99005-Tire Secure Ring (9 holes) 8P (T2 T3 T6/Extra Longer Version)	99006-Pre-Mounted Tire Set (Left) 2P (Right) 2P
98035-Wheel Nuts 4P	85734-Body Pins 6P	98056-E-Clips 7.0mm 8P	98084-Repairing Kit 4P	98041- Balls Φ7.8mm 4P
98042- Ball Stand Φ6.8mm 4P	98043-Balls Stand Φ6.8mm 4P	98044-Ball Stand Φ7.8mm 6P (For 94880Version)	98055-Nylon Nuts M3 8P	98046- Bushing (5*8*2.5) 4P
98052-Ball Bearings (6*12*4) 4P	98053-Ball Bearings 8*16*5 8P	98054-Ball Bearings 12*18*4 4P	98085-Set Screws 3*4 6P	85834-Set Screws M5*4 6P
98058-Set Screws 3*25 4P	98081-Cap Head Machine Screw 4*20 4P	98082-Cap Head Machine Screw 3*28 4P	98064-Cap Head Machine Screw 3*12 8P	98068-Cap Head Machine Screw 3*8 8P
98065-Cap Head Machine Screw 3*18 6P	98066-Cap Head Machine Screw 3*14 6P	98067-Cap Head Machine Screw 3*4 4P	98069-Cap Head Machine Screw 4*8 8P	98106-Column Head Self-Tapping Screw3*6 14P

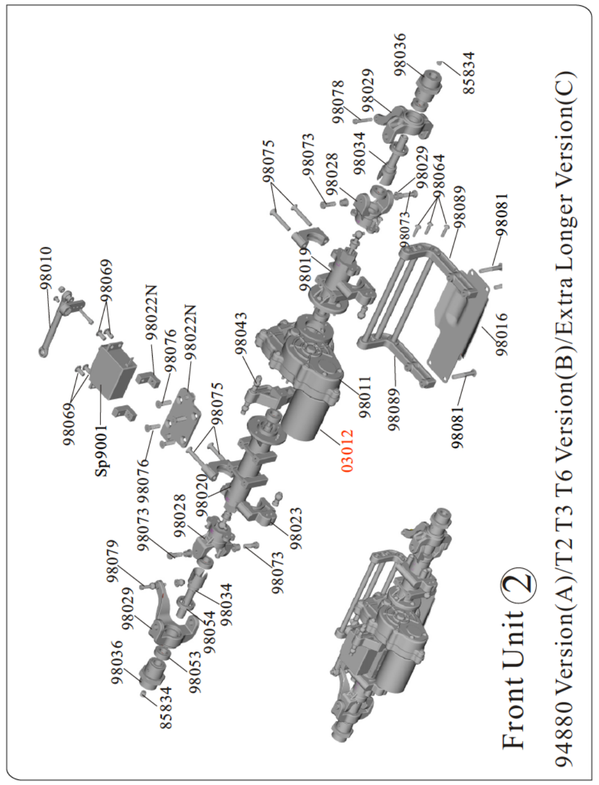

Front Unit ②

94880 Version(A)/T2 T3 T6 Version(B)/Extra Longer Version(C)

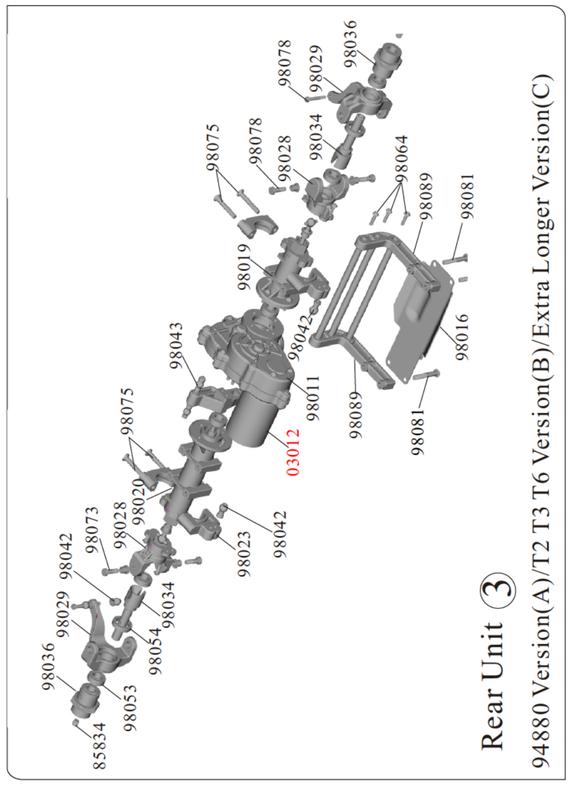

Rear Unit ③

94880 Version(A)/T2 T3 T6 Version(B)/Extra Longer Version(C)

Spare Part

98071-Column Head Machine Screw 3*22 6P	98072-Column Head Machine Screw 3*24 4P	98073-Column Head Machine Screw 4*12 4P	98078-Column Head Machine Screw 3*18 6P	98079-Column Head Machine Screw M3*28 4P
98080-Column Head Machine Screw 3*44 4P	98075-Countersink Head Machine Screw 4*24 8P	98076-Countersink Head Machine Screw M4*14 4P		

Upgradable Optional

880001-Alum.Shock Absorber(F/R) 4P (For 94880 version)	990001-Alum.Shock Absorber(F/R) 4P (For T2 T3T2/Extra Longer Version)	880003-Alum.Steering Arm 4P	880002-Alum.Caster Mounts(Left) 2P (Right) 2P	880004-Al.Suspension Arm(F/R) 4P (For 94880 version)
880005-Alum.Battery Mount 4P	880006-Alum.Bumper Post Mount 4P	880007-Alum.Servo Mount 2P	880008-Alum.Susp. Arm Mount(F/R) 4P	880010-Alum.Link Mount 2P
880009-Alum.Body Posts 4P	880018-Alum Wheel Weight Set220g 4P	880014-Aluminum Tire Secure Ring 2P	98037C-Carbon Color Receiver Mount	98038C-Carbon Color Battery Mount
98011C-Carbon Color Gear Box	98049C-Carbon Color Rims 2P			

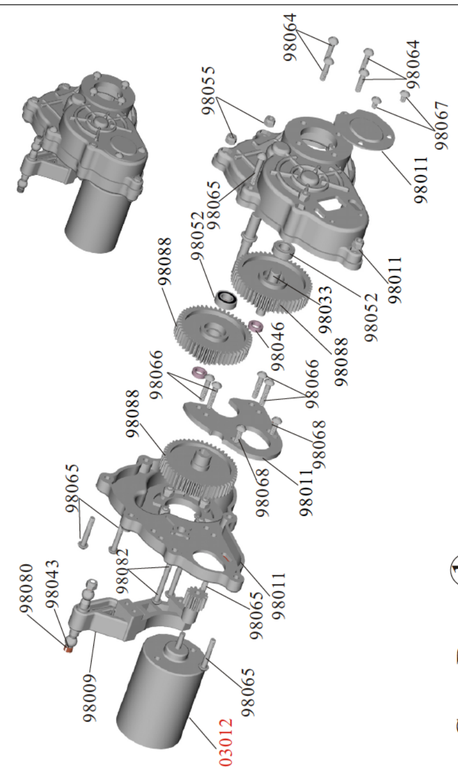

Gear Box ①

94880 Version(A)/T2 T3 T6 Version(B)/Extra Longer Version(C)

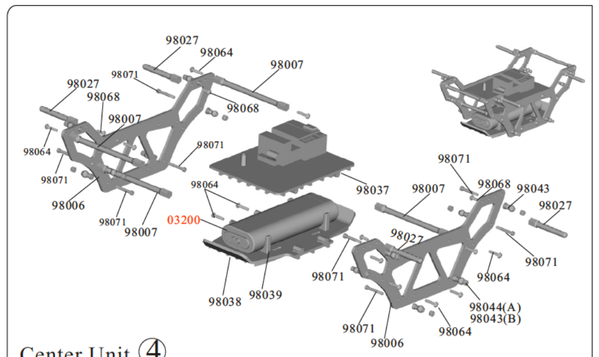

Center Unit ④

94880 Version(A)/T2 T3 T6 Version(B)/Extra Longer Version(C)

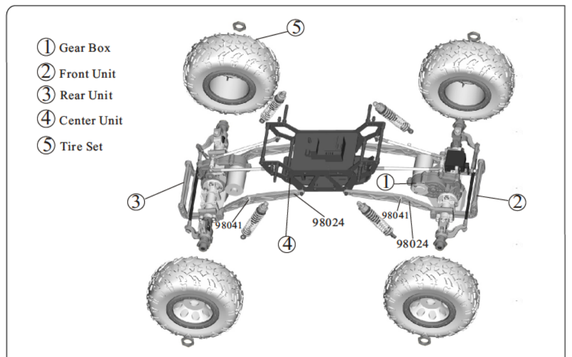

94880 Version(A) Exploded View

Tire Set Assembly

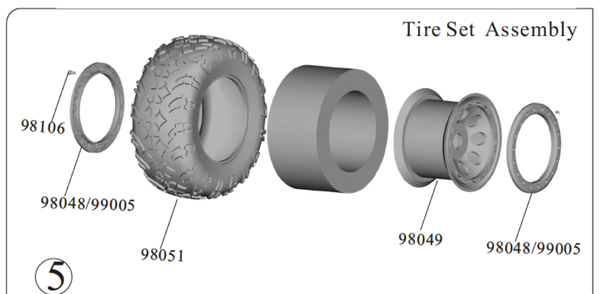

⑤

94880 Version(A)&T2 T3 T6 Version(B)&ExtraLonger Version (C)

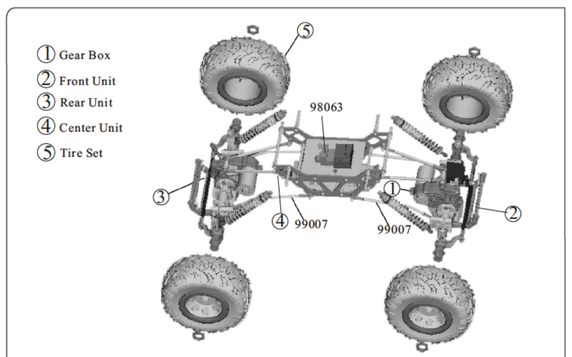

T2 T3 T6 Version(B)/Extra Longer Version(C) Exploded View