TRX 2.5

Engine Assembly

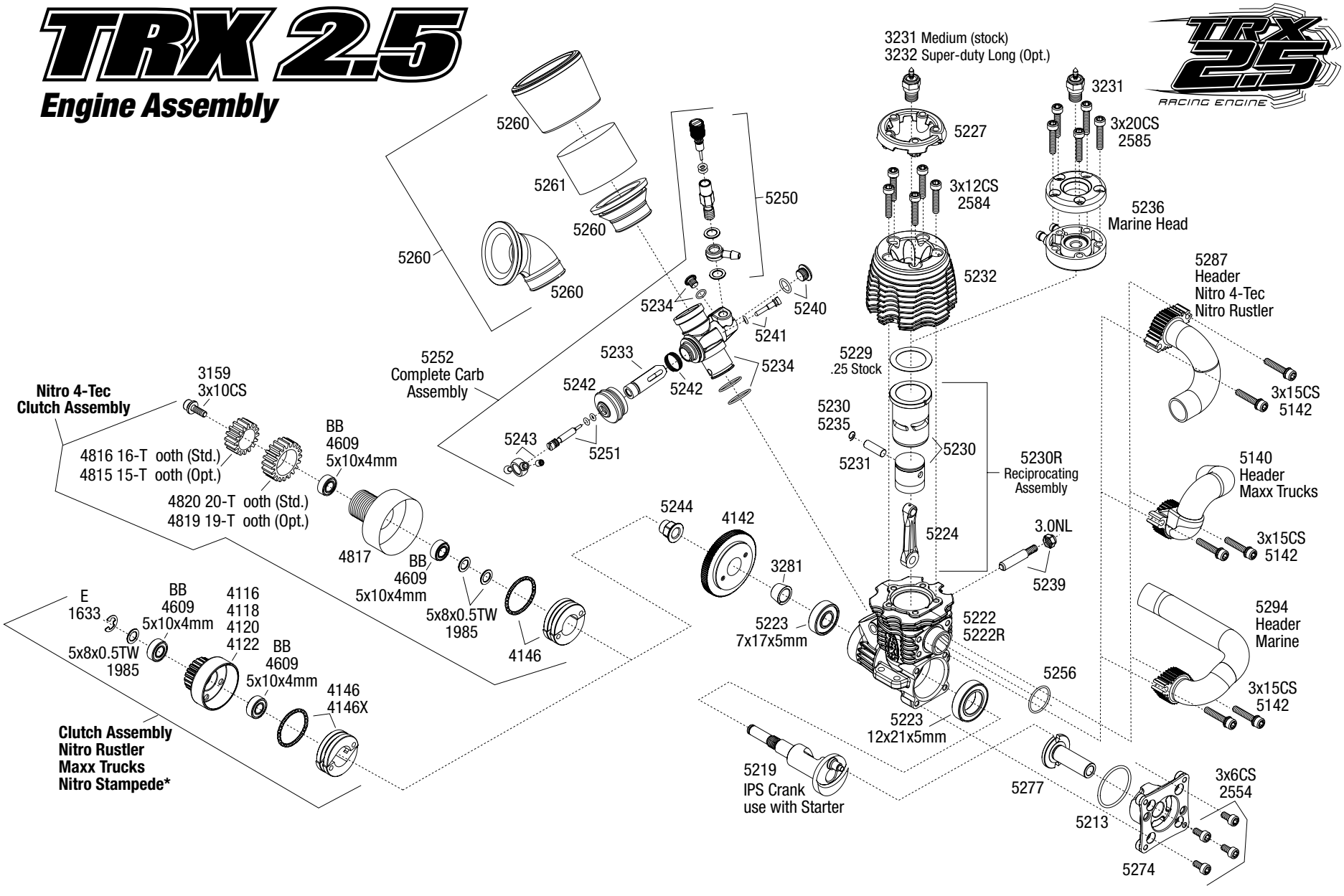

REV 050119

Specifications on this page are subject to change without notice.
Every attempt has been made to ensure the accuracy of this drawing, however Traxxas cannot be held responsible for typographical or other errors.

* Nitro Stampede comes equipped with Pro .15™ engine.