ENGINE PARTS

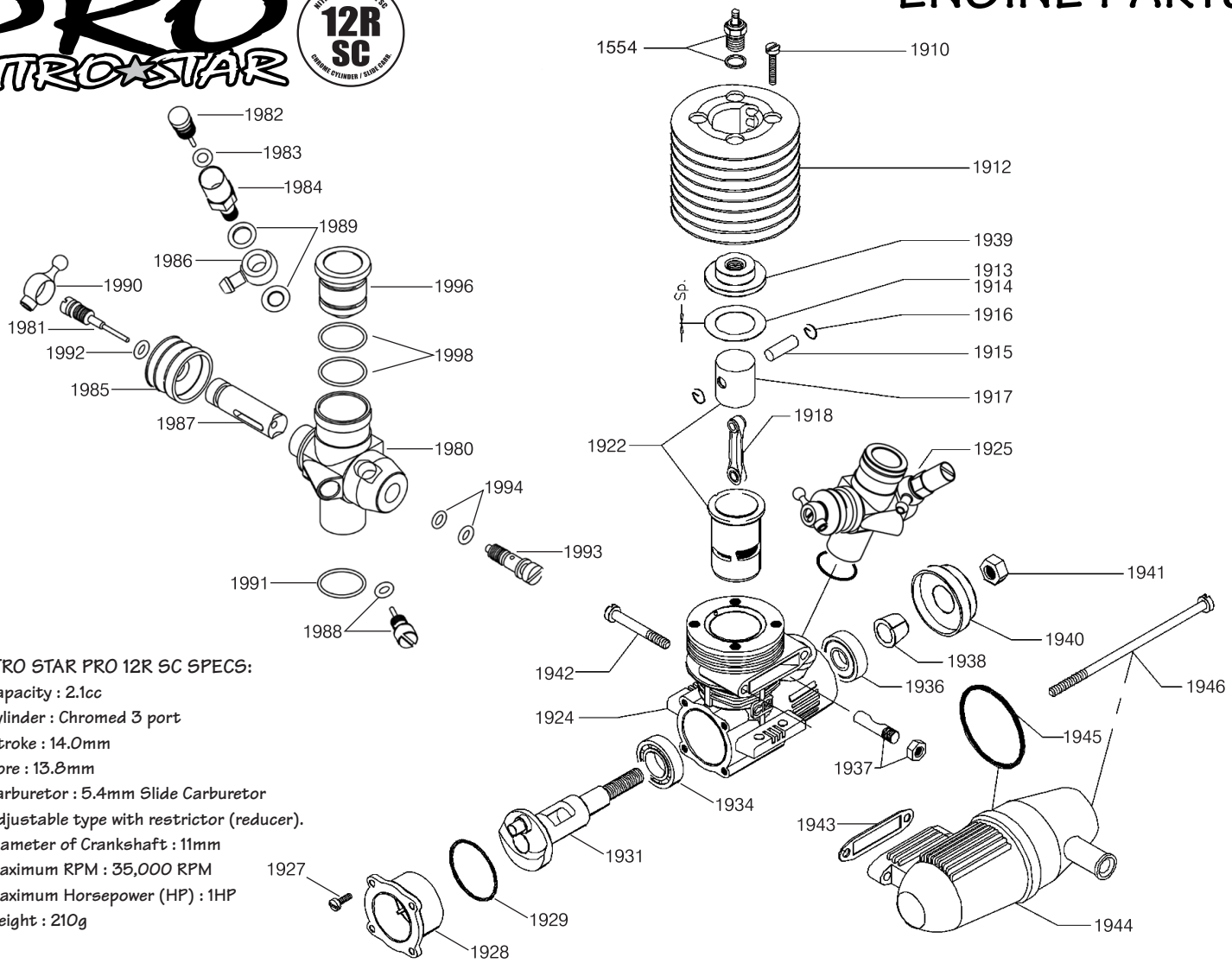

NITRO STAR PRO 12R SC SPECS:

- Capacity : 2.1cc
- Cylinder : Chromed 3 port
- Stroke : 14.0mm
- Bore : 13.8mm
- Carburetor : 5.4mm Slide Carburetor adjustable type with restrictor (reducer).
- Diameter of Crankshaft : 11mm
- Maximum RPM : 35,000 RPM
- Maximum Horsepower (HP) : 1HP
- Weight : 210g

#1905 NITRO STAR PRO 12R SC PARTS

1554	Glow Plug - Medium (C.4)	$8.00
1910	Screw Set For Cylinder Head (4pcs)	$3.00
1912	Cylinder Head Purple	$43.00
1913	Head Gasket 0.10 (Copper)	$2.00
1914	Head Gasket 0.30 (Aluminum)	$2.00
1915	Wrist Pin (Piston Pin)	$5.00
1916	Wrist Pin Clip (Piston Pin Clips) (2pcs)	$3.00
1917	Piston	$23.00
1918	Competition Connecting Rod	$30.00
1922	Piston And Chromed Sleeve Set	$75.00
1923	Set Complete Piston/3L Chr Sleeve/Rod/Pin/Clips	$105.00
1924	Crankcase	$75.00
1925	Slide Carburetor	$60.00
1927	Screw Set For Rear Cover (4pcs)	$2.00
1928	Rear Cover	$10.00
1929	O-Ring For Rear Cover	$2.00
1931	Crank Shaft (Std)	$39.00
1934	Rear Ball Bearing Competition 11 x 21 x 5mm	$25.00
1936	Front Ball Bearing 7 x 19 x 6mm	$18.00
1937	Lock And Nut For Carburetor	$3.00
1938	Cone Collet	$2.00
1939	Underhead	$10.00
1940	Propeller Hub	$4.00
1941	Nut For Propeller Blocking	$2.00
1980	Body For Aluminum Slide Carburetor	
1981	Base Speed Needle With O-Ring	$12.00
1982	Full Speed Needle With O-Ring	$6.00
1983	O-Ring For Full Speed Needle	$2.00
1984	Full Speed Adjusting Gearing	$11.00
1985	Dust Rubber Protection For Carburetor	$5.00
1986	Intake Fuel Pipe	$3.00
1987	Carburetor Throttle	$13.00
1988	Screw For Base Speed Mechanic Needle Adjusting	$5.00
1989	Set Aluminum Gaskets For Full Speed Adjusting	$2.00
1990	Carburetor Bearing For Uniball	$10.00
1991	Outer O-Ring For Carburetor	$2.00
1992	O-Ring For Base Speed Needle	$2.00
1993	Screw For Base Speed Adjusting	$15.00
1994	O-Ring For Base Speed Adjusting	$2.00
1995	Kit O-Ring For Carburetor	$11.00
1996	Hole Reducer Diameter 5.4mm	$14.00
1998	Set O-Rings For Reducer (2pcs)	$3.00

OPTION PARTS

1553	Glow Plug - Hot (C.3)	$8.00
1555	Glow Plug - Cold (C.5)	$8.00
1932	Crank Shaft (SG/Serpent)	$44.00
1942	Screws For Muffler (2pcs)	$2.00
1943	Aluminum Gasket For Muffler	$5.00
1944	Muffler Set	$35.00
1945	O-Ring For Muffler	$3.00
1946	Screw To Install Pipe	
1997	Hole Reducer Diameter 4.4mm	$14.00
A896	Throttle Linkage Set	$3.00

RACING
15321 Barranca Parkway Irvine, CA 92618
Phone: 949.753.1099 Fax: 949.753.1098